Introduction to Digital Systems

Part II (4 lectures)

2025/2026

Combinational Logic Blocks

Arnaldo Oliveira, Augusto Silva, Iouliia Skliarova, Adão Silva

Lecture 6 contents

- Block oriented combinational logic design
- Multiplexers
- Demultiplexers

Multiplexers

- A multiplexer is a digital switch: one out of *n* data sources is passed to a single output
  - Information selector

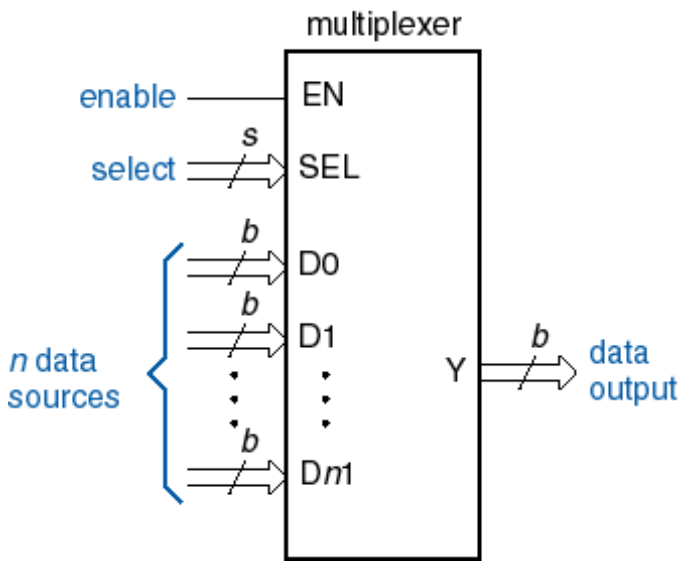

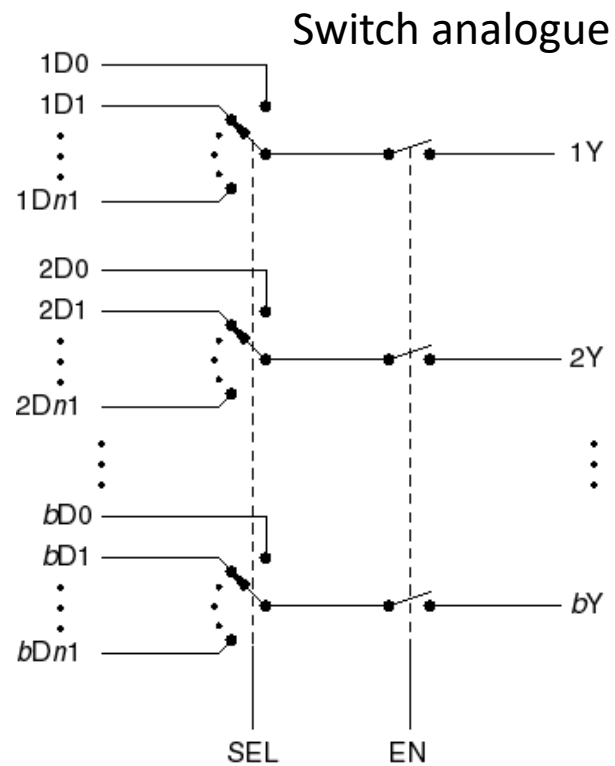

2^n:1 Mux models

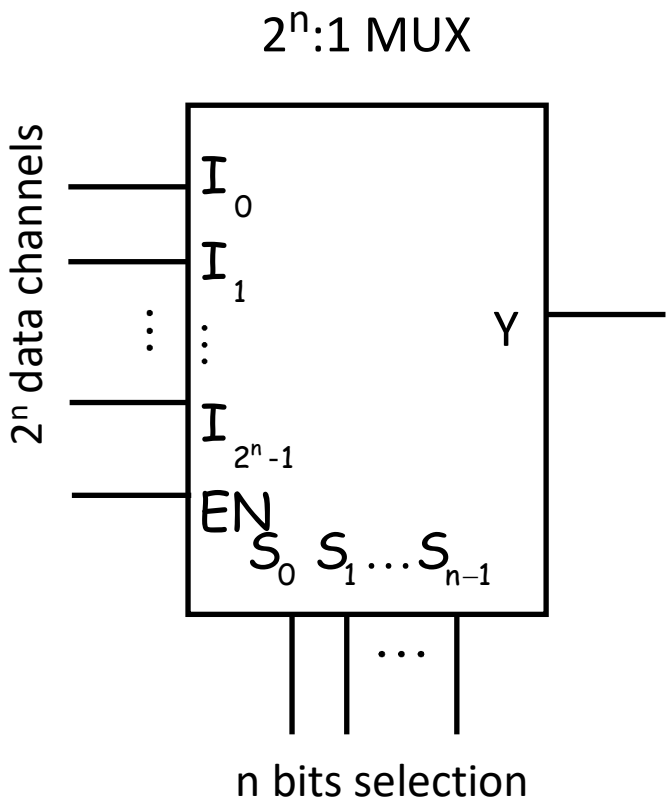

4:1 Mux Truth Table

EN	S_1	S_0	Y
0	x	x	0
1	0	0	I_0
1	0	1	I_1
1	1	0	I_2
1	1	1	I_3

Alternate Symbol

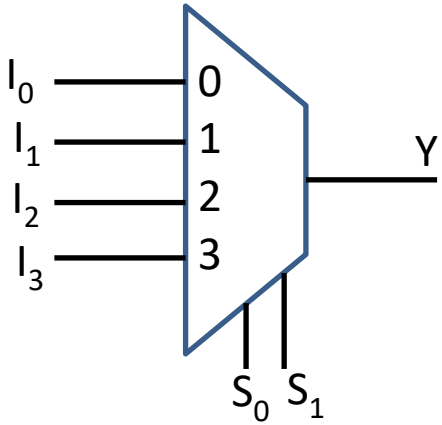

Functional description

4:1 Mux Truth Table

EN	S_1	S_0	Y
0	x	x	0
1	0	0	I_0
1	0	1	I_1
1	1	0	I_2
1	1	1	I_3

$$Y = EN.\left[\sum_{k=0}^{2^n-1} m(S)_k I_k\right]$$

$m(S)_k$ is the kth minterm on the selection variables $S_0 \ldots S_{n-1}$

Alternate Symbol

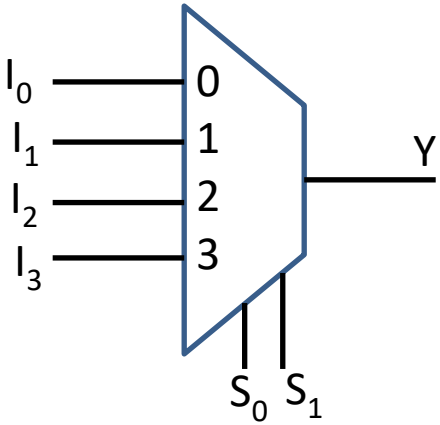

Exercise: Draw the 4:1 Mux internal logic circuit

The 74151 model-8:1mux

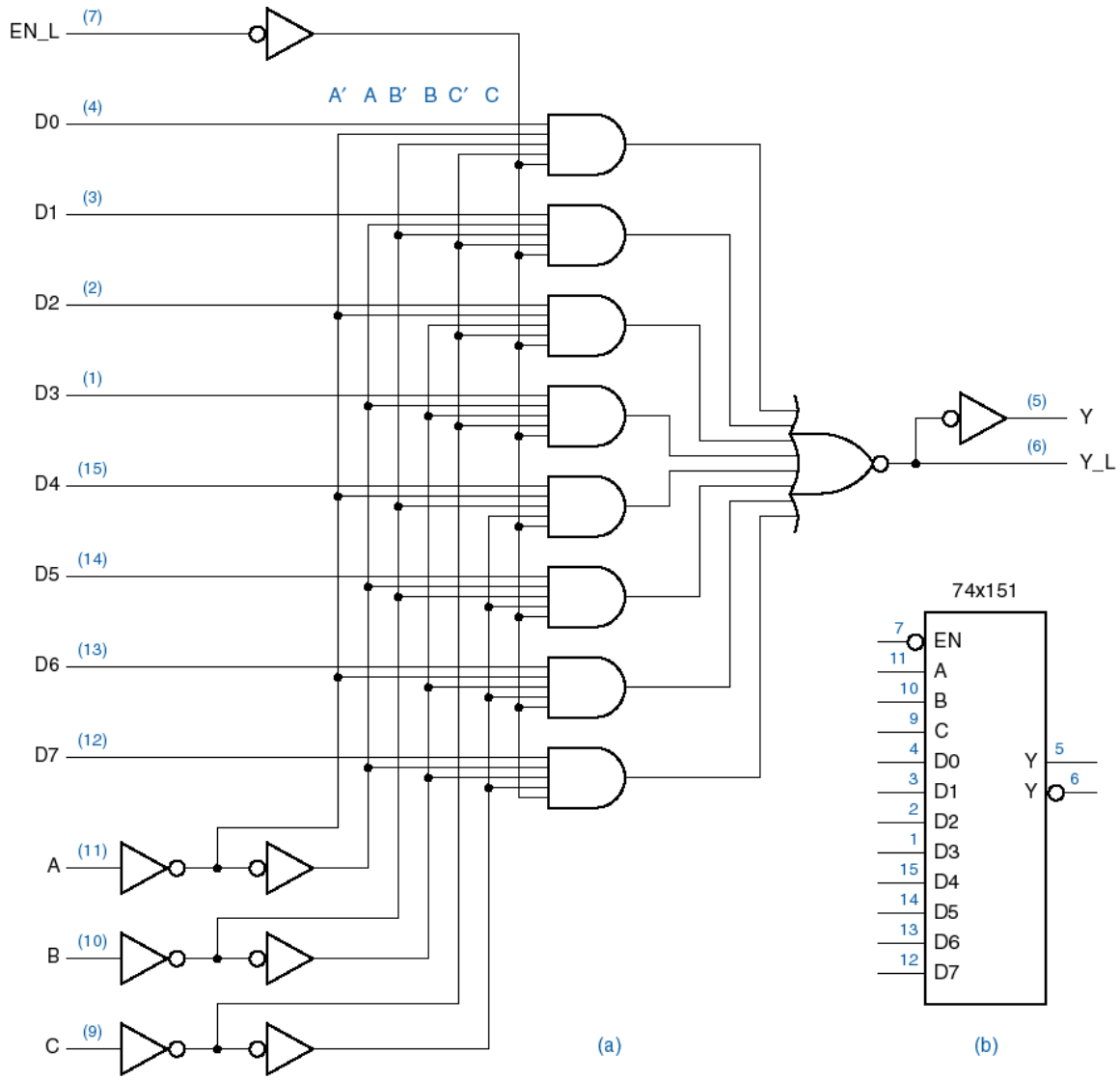

Inputs				Outputs	
EN_L	S2	S1	S0	Y	Y_L
1	x	x	x	0	1
0	0	0	0	D0	D0′
0	0	0	1	D1	D1′
0	0	1	0	D2	D2′
0	0	1	1	D3	D3′
0	1	0	0	D4	D4′
0	1	0	1	D5	D5′
0	1	1	0	D6	D6′
0	1	1	1	D7	D7′

Mux and decoders

- Verify that the logic circuit is a 8:1 Mux

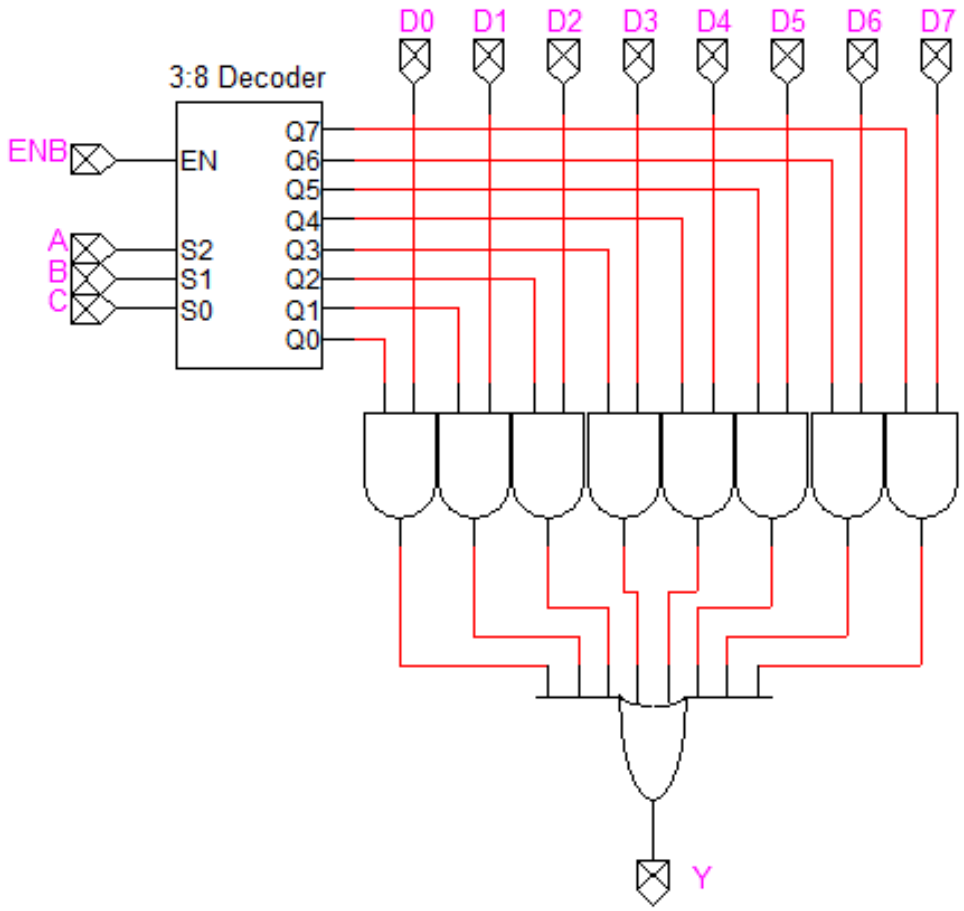

Demultiplexers

- Functional inverse of a multiplexer
  - An inverse digital switch: a single input is "routed" to one out of *N outputs*

$$O_k = EN.D_{in}m_k(S), \qquad k = 0, \dots 2^n - 1$$

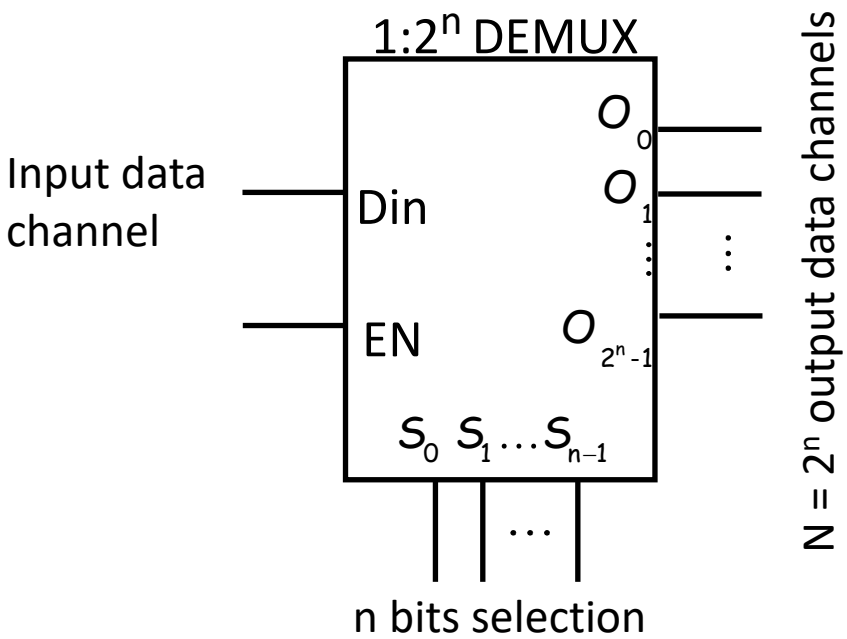

Question: How can we use a demux as a decoder?

Mux/Demux

- Multiplexing and demultiplexing circuits play important roles in switching circuits, such as in the telecommunications field.
  - They can, for example, be used to share the use of a common line, a bus, by several transmitters and receivers.

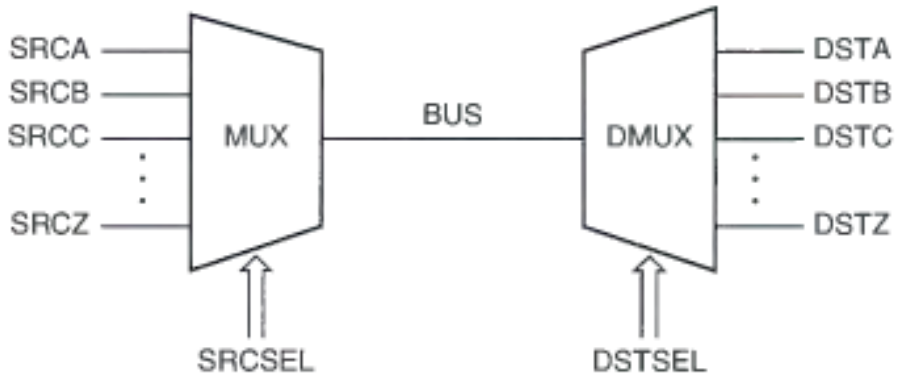

Multiplexing multibit data channels

- Mux 4:1, 4 bit input data channels
- Explain the timing diagram

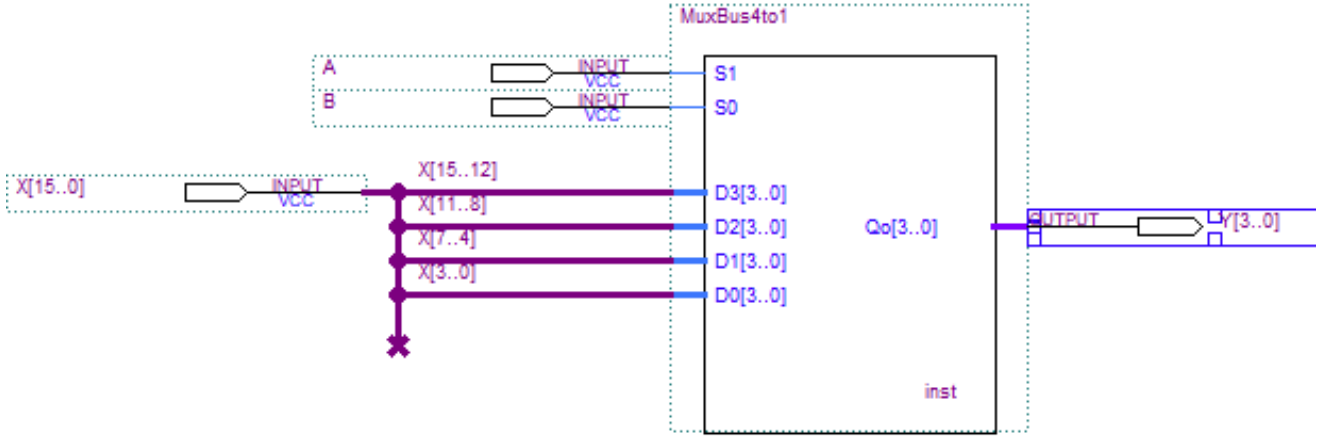

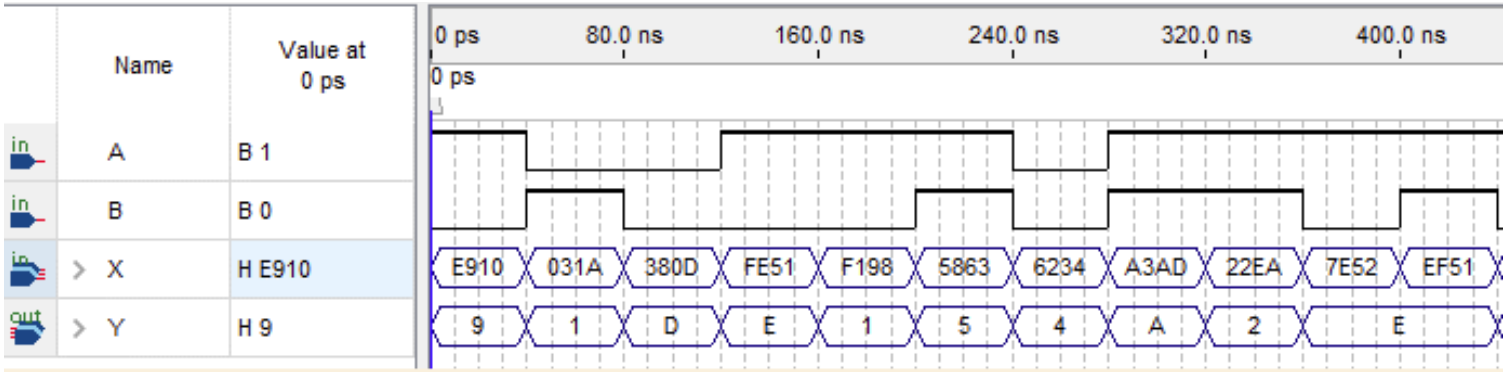

The 74157 model

- 74157: 4x2:1

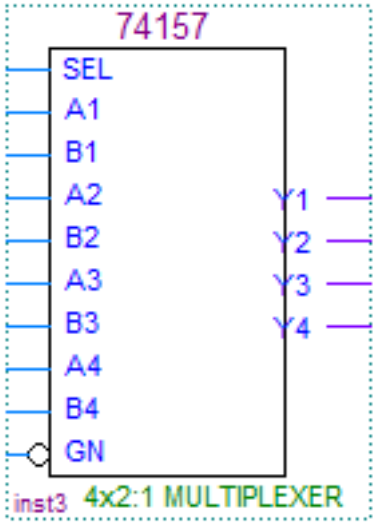

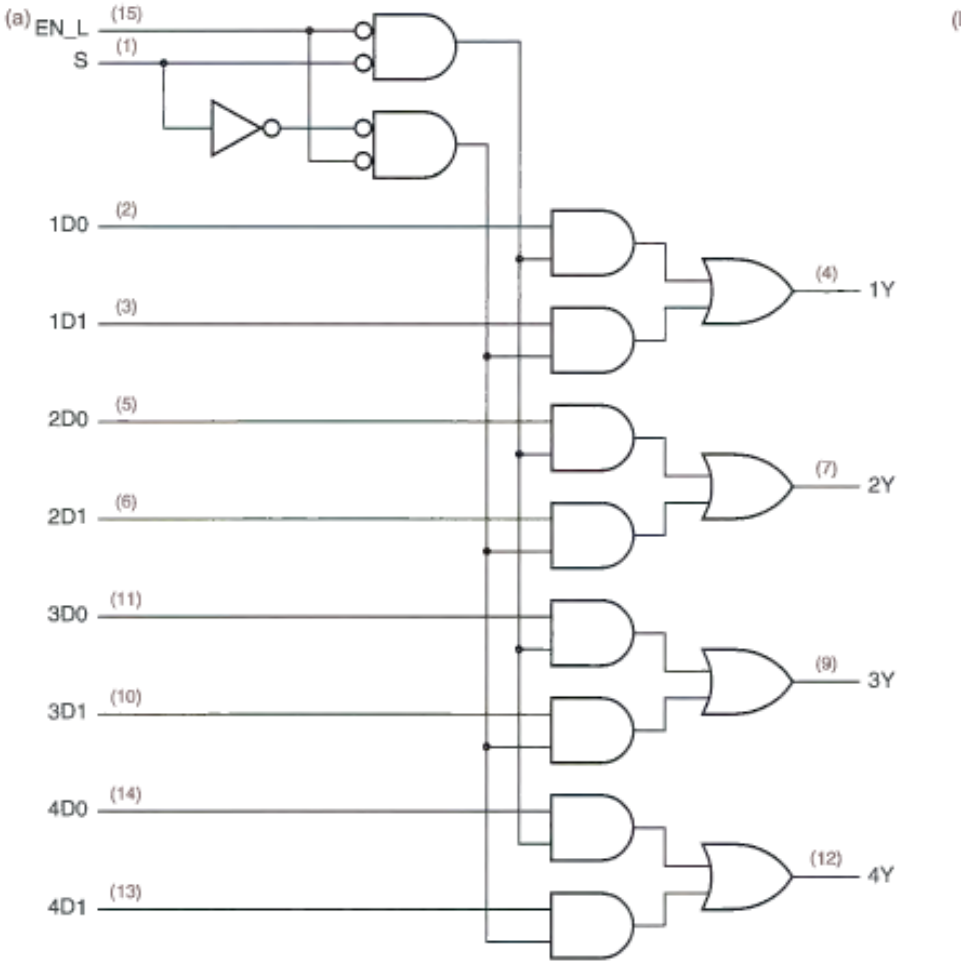

The 74157 model - 4x2:1

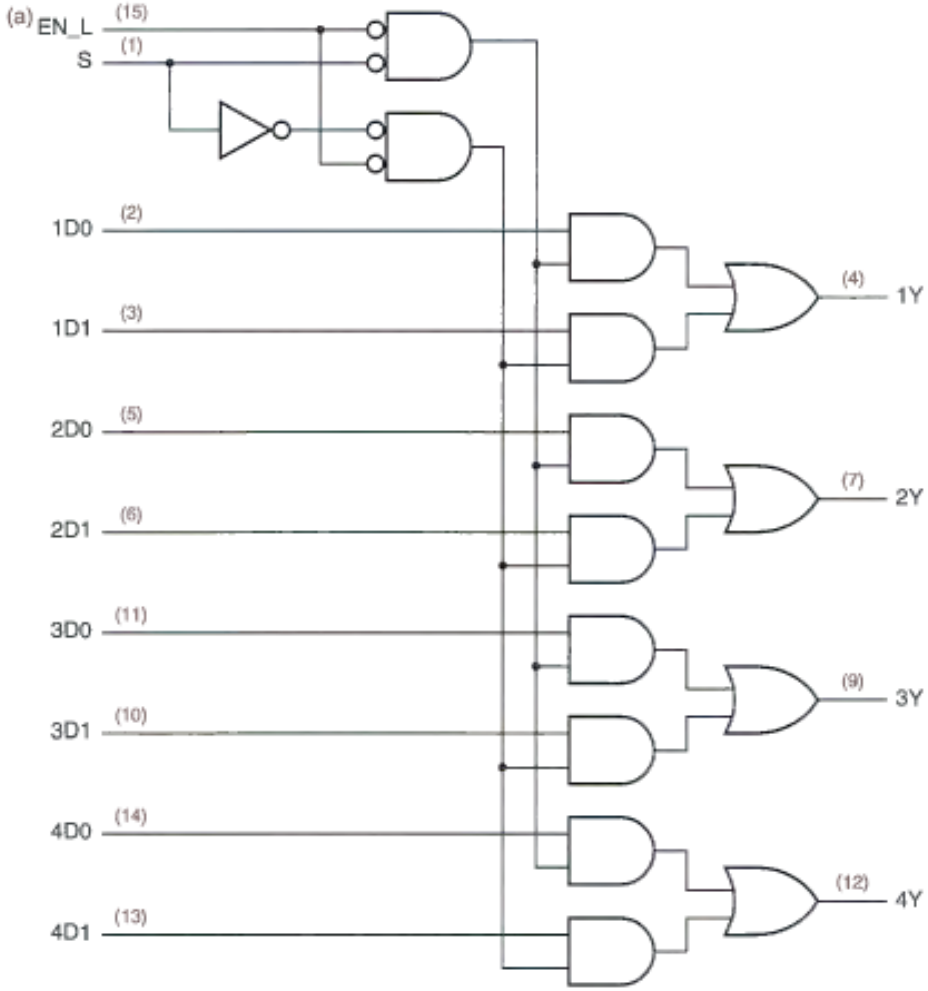

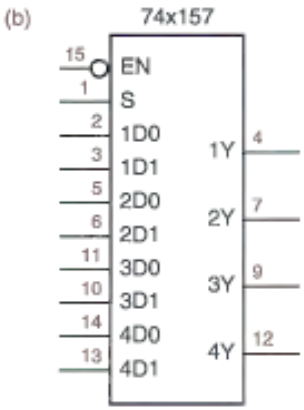

Inputs		Outputs			
EN_L	S	1Y	2Y	3Y	4Y
1	X	0	0	0	0
0	0	1D0	2D0	3D0	4D0
0	1	1D1	2D1	3D1	4D1

The 74153 model 2x4:1

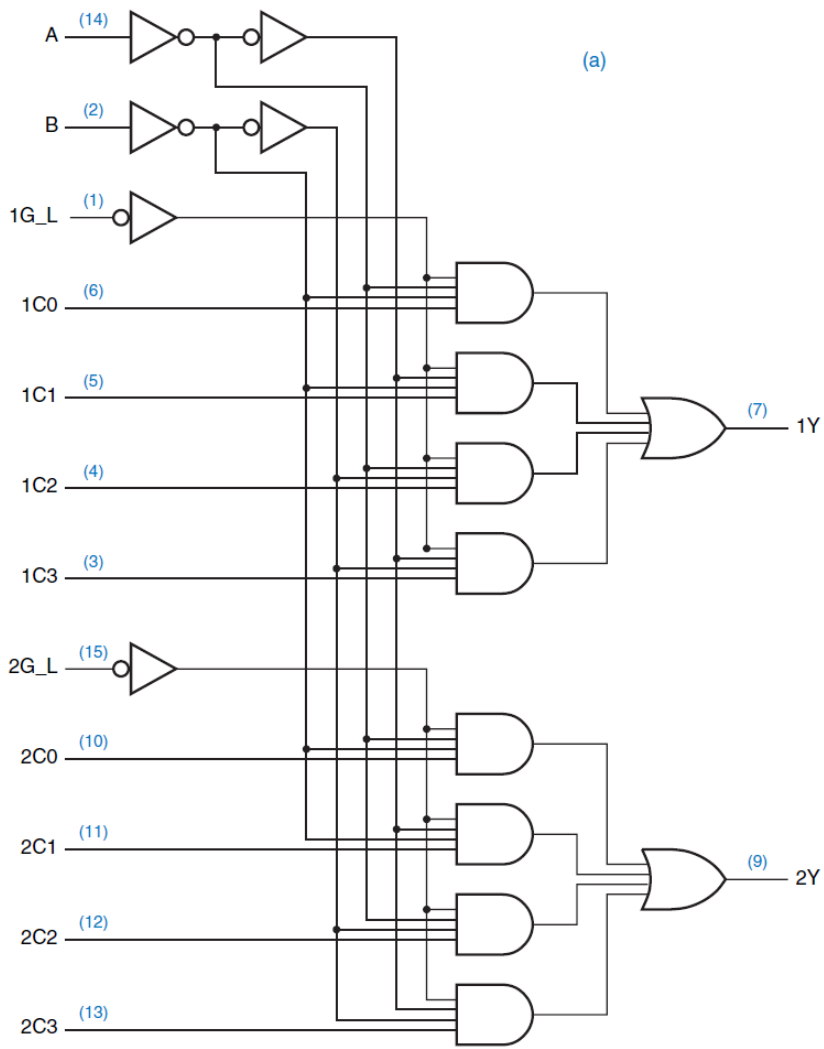

Inputs				Outputs	
1G_L	2G_L	B	A	1Y	2Y
0	0	0	0	1C0	2C0
0	0	0	1	1C1	2C1
0	0	1	0	1C2	2C2
0	0	1	1	1C3	2C3
0	1	0	0	1C0	0
0	1	0	1	1C1	0
0	1	1	0	1C2	0
0	1	1	1	1C3	0
1	0	0	0	0	2C0
1	0	0	1	0	2C1
1	0	1	0	0	2C2
1	0	1	1	0	2C3
1	1	x	x	0	0

Table Mux-1 Truth table for a 74x153 4-input, 2-bit multiplexer.

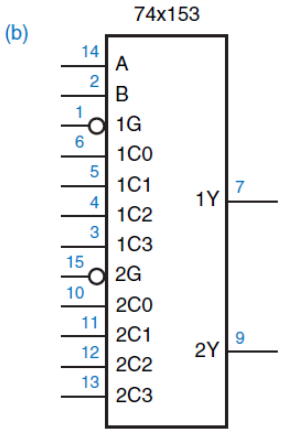

Mux hierarchies

- 8:1 with 7x(2:1)

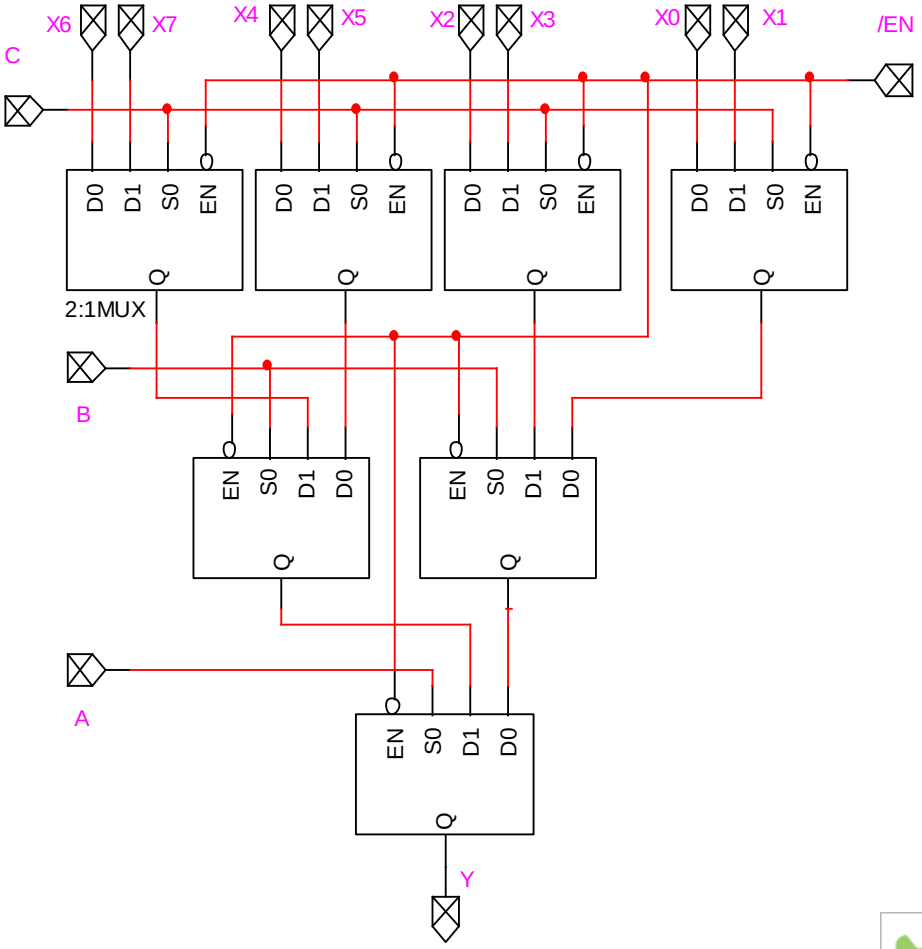

- Always check the design by obtaining the truth table.
- Note that IN THIS case A is the most significant selection variable

Mux hierarchies

- 8:1 with 2x(4:1 MUX) + 1x(2:1 MUX)

  - Always check the design by obtaining the truth table.
  - Note that IN THIS case A is the most significant selection variable

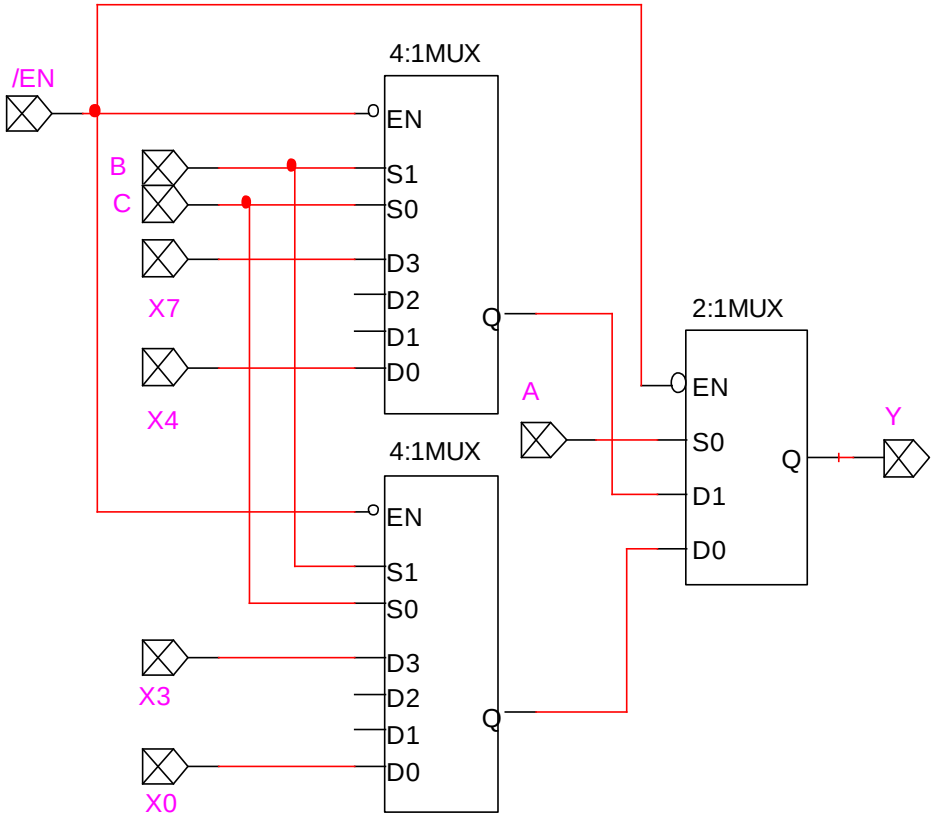

Mux hierarchies

- 8:1 with 4x(2:1 MUX) + 1x(4:1 MUX)

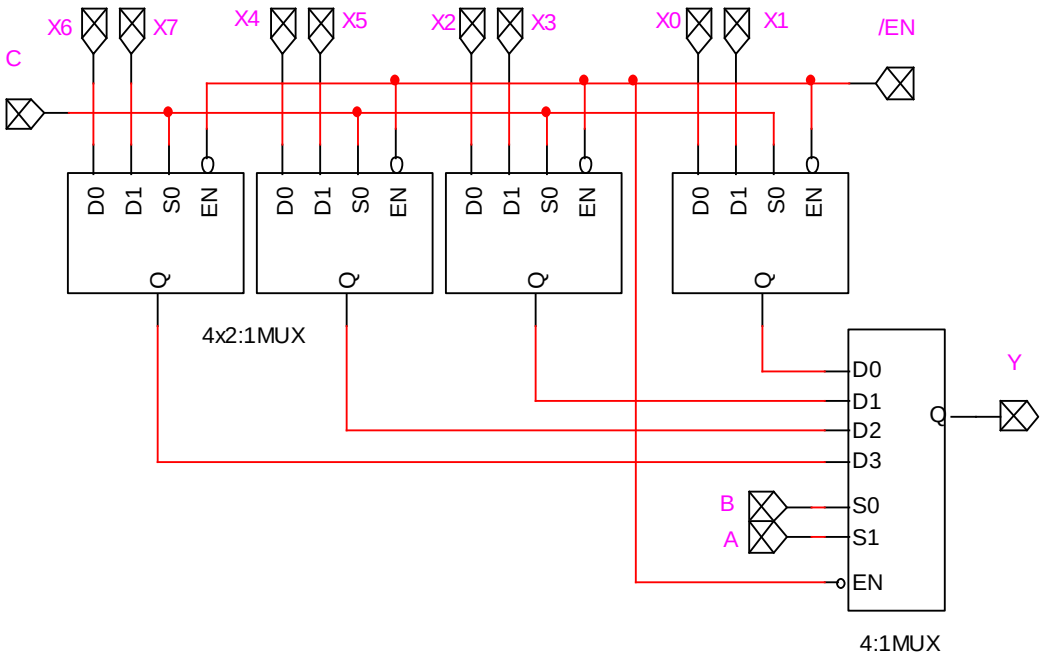

- Always check the design by obtaining the truth table.

- Note that IN THIS case A is the most significant selection variable

Logic Function Unit (LFU)

- It is possible to implement a logic function unit by using a multiplexer
  - Use $C_2C_1C_0$ as function code (Opcode)

C_2	C_1	C_0	F
0	0	0	1
0	0	1	A+B
0	1	0	(A.B)’
0	1	1	A⊕B
1	0	0	(A⊕B)’
1	0	1	(A+B)’
1	1	0	A.B
1	1	1	0

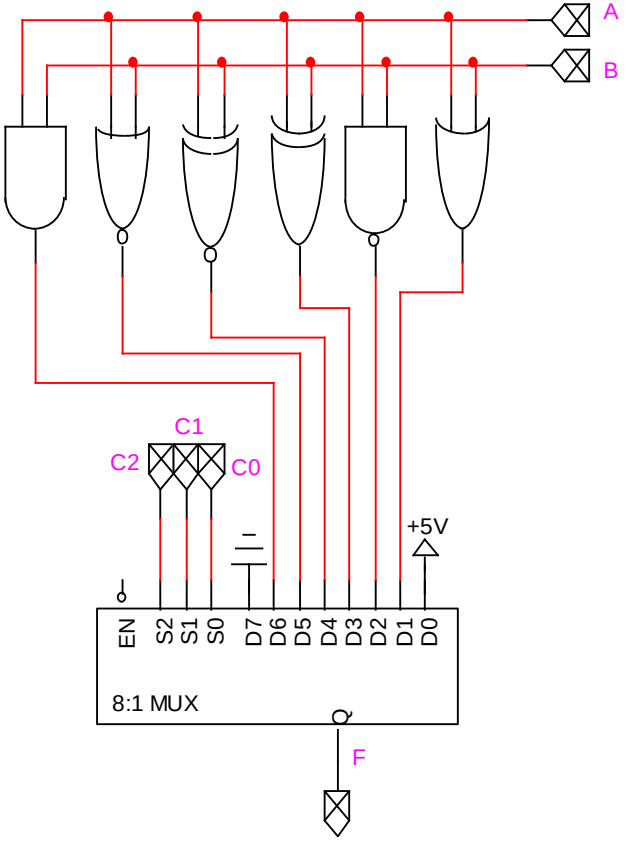

Exercise

- Explain the LFU timing diagram

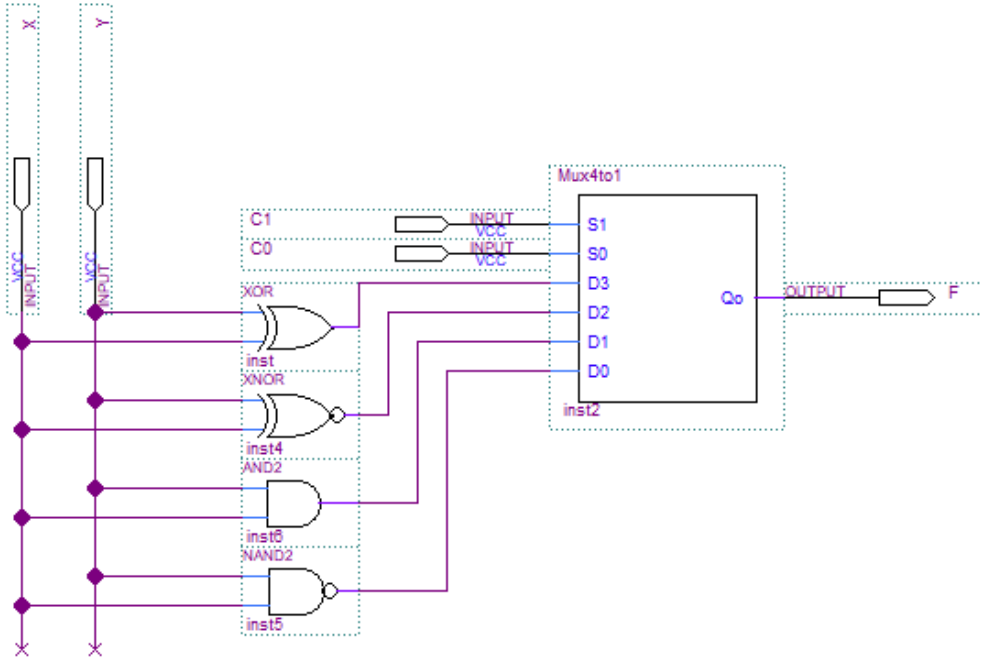

	Name	Value at 0 ps
in	Opcode	B 00
in	X	B 0
in	Y	B 1
out	F	B 1

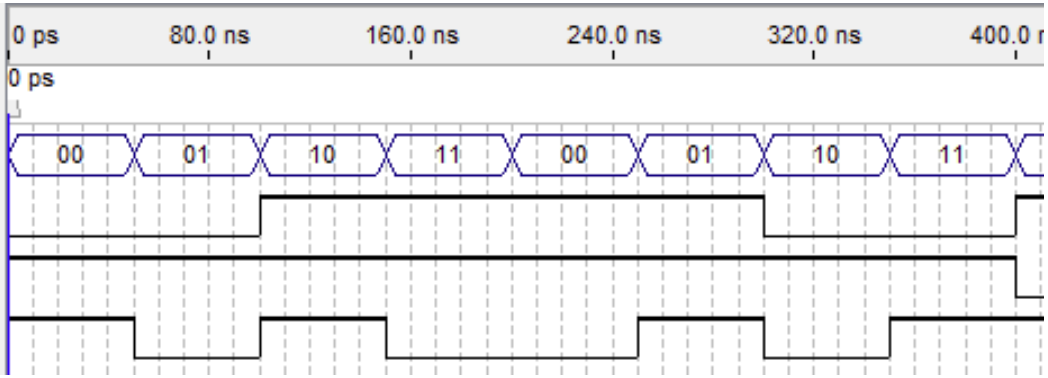

Boolean Functions with Multiplexers

- Simplest approach -> Selection = input variables
  - Direct mapping of the Truth Table
  - $D_k = F_k$

A	B	C	F	
0	0	0	0	D0
0	0	1	0	D1
0	1	0	1	D2
0	1	1	1	D3
1	0	0	1	D4
1	0	1	0	D5
1	1	0	1	D6
1	1	1	0	D7

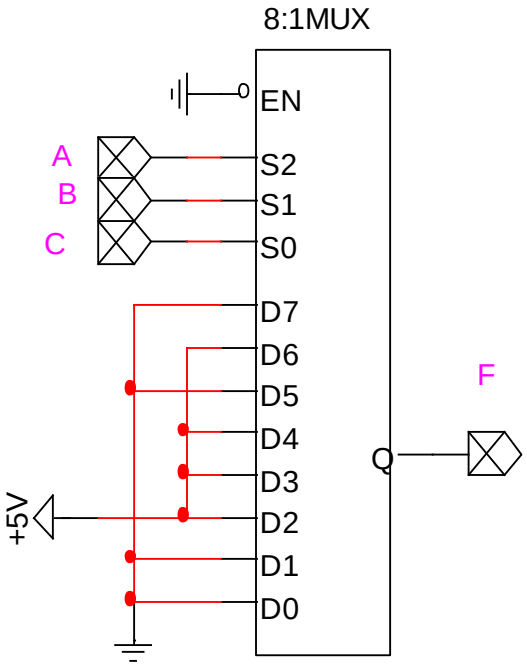

Boolean Functions with Multiplexers

- The general case -> selection ≠ input variables:
  - Selection = a subset of input variables
    - As a practical rule , you should choose the variables that appear most often in the function expression.
  - The next step is to identify what should be linked to each of the inputs. It is necessary to check each of the possible combinations of the selection variables and the value that the function takes.
- Example

n-1 input variables used for selection

I1	I2	..	In	F			
…	..	..	0	0	0	1	1
…	…	..	1	0	1	0	1
				0	In	$\overline{In}$	1

Possible output values as a function of I_n

Example

- Implement the Boolean function F(A,B,C,D) using a 8:1 Mux

$$F(A,B,C,D) = \sum m(1,3,6,7,8,11,12,14)$$

CD \ AB	00	01	11	10
00	0	0	1	1
01	1	0	0	0
11	1	1	0	1
10	0	1	1	0

A

B

C

D

1. Use the Karnaugh map JUST to layout the truth table

2.Choose the subset of inputs to be assigned to the mux selection inputs

Eg. A,B,C

3.Find the logic values of the mux data inputs as functions of the remaining inputs

D in this case

Regions of the truth sharing the same value of the selection inputs. (A,B,C) in this case. DO NOT MISINTERPRET as prime implicants

Example

- Find the error in the logic circuit

$$F(A,B,C,D) = \sum m(1,3,6,7,8,11,12,14)$$

CD \ AB	00	01	11	10
00	0	0	1	1
01	1	0	0	0
11	1	1	0	1
10	0	1	1	0

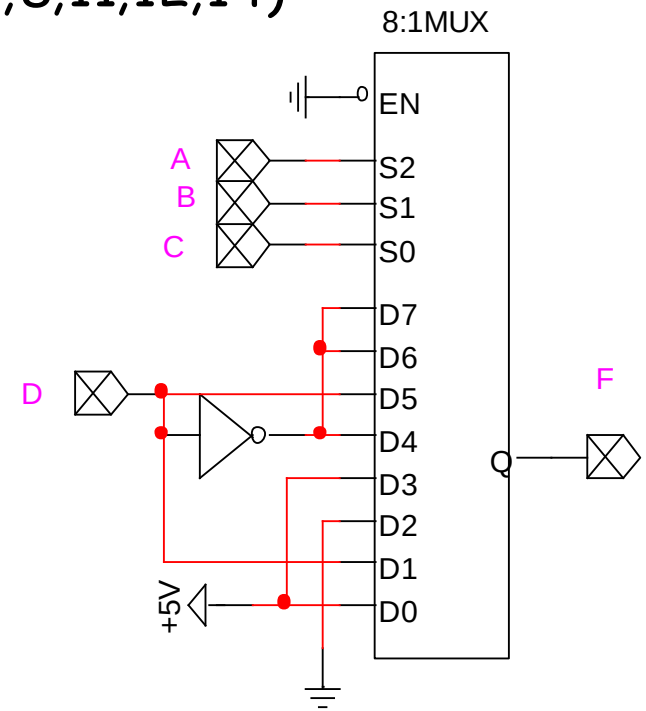

There is a mistake:
Input D_0 should be D not "1"

Exercise

- Implement the Boolean function *F* using a a MUX 4:1 and additional elementary logic

$$F(A,B,C,D) = \sum m(1,2,3,5,8,10,11,12,14)$$

- Several choices of input variables are possible to be assigned to the mux selection inputs. Try for example (A,B) and (C,D)

Exercise

- Using A,B for selection

$$F(A,B,C,D) = \sum m(1,3,6,7,8,11,12,13)$$

CD \ AB	00	01	11	10
00	0	0	1	1
01	1	0	1	0
11	1	1	0	1
10	0	1	0	0

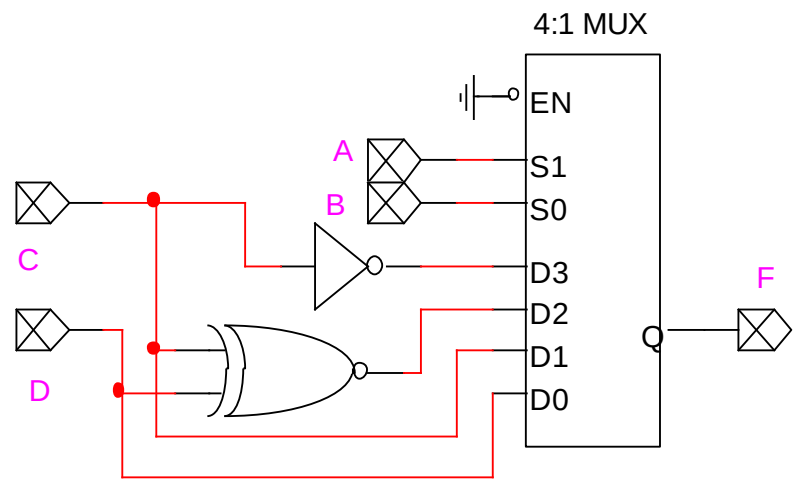

Exercise

- Using C,D for selection

$$F(A,B,C,D) = \sum m(1,3,6,7,8,11,12,14)$$

CD \ AB	00	01	11	10
00	0	0	1	1
01	1	0	0	0
11	1	1	0	1
10	0	1	1	0

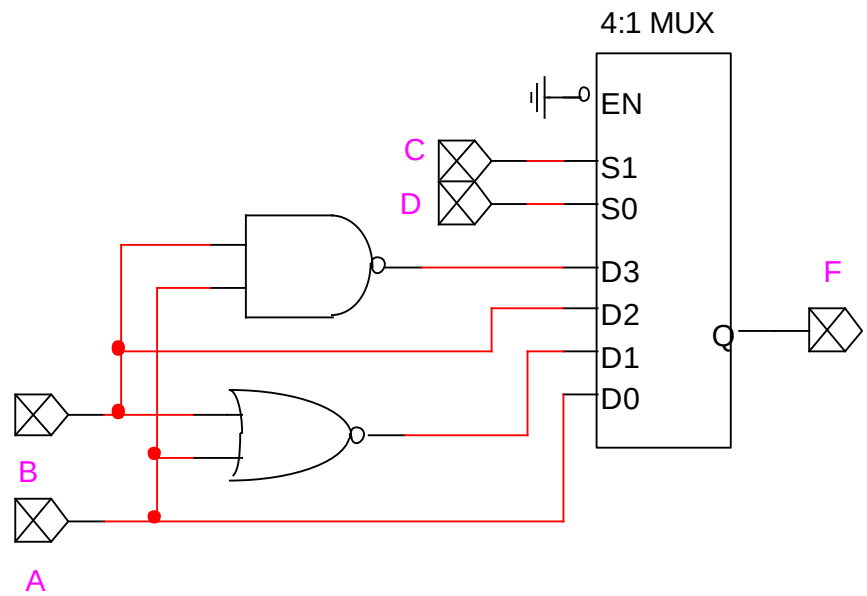

High-Impedance (High – Z)

- A switch model

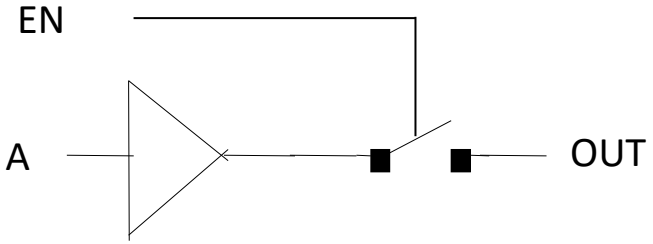

- When the switch is open there is an almost infinite resistance (Impedance) to the signal flow through the “wire” OUT.

- The output signal is left ”floating” with neither HIGH or LOW logic levels assigned.

- The output is assigned a High-Z state and the device exhibits a 3 State behavior
  - “0”, “1”, or high impedance

3 State Buffers

- Possible outputs: HIGH, LOW, High-Z

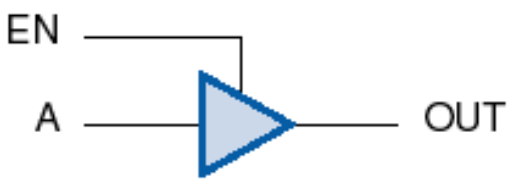

EN	A	OUT
L	L	Hi-Z
L	H	Hi-Z
H	L	L
H	H	H

Alternatives

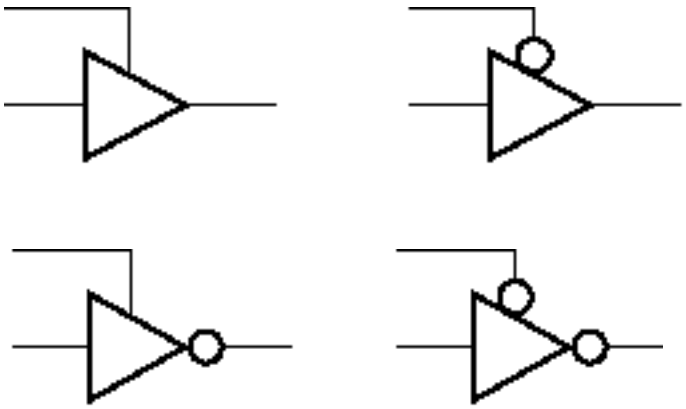

Wire sharing

- High-Z outputs may be physically connected

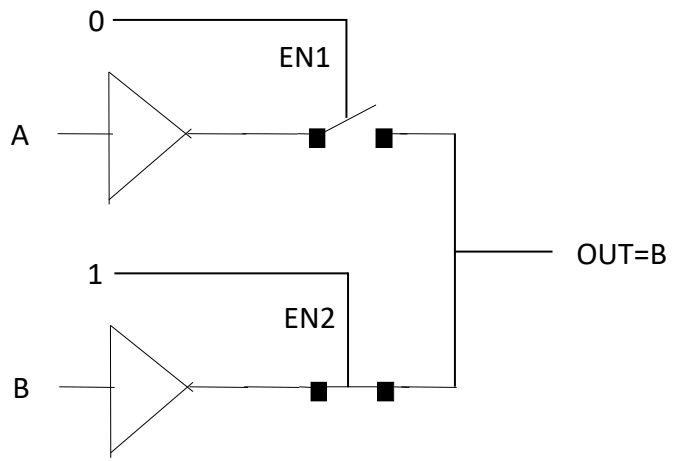

- Of course EN1 = EN2 = 1 should never occur.
- Tight control of enabling inputs is required
  - When EN1=0, EN2=1 and vice-versa. Usually used to allow that multiple sources share the same transmission line.

A special kind of Mux

- Efficient multiplexing strategy
- Mux 2:1

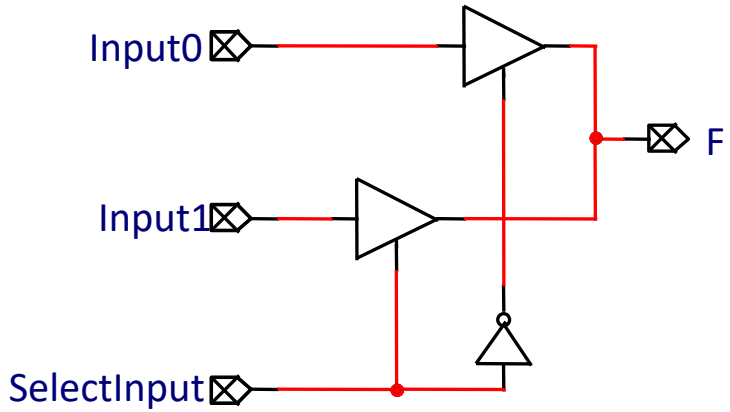

- Write the Truth Table

Exercise

- Write the truth table of the circuit and verify that's a 4:1 mux

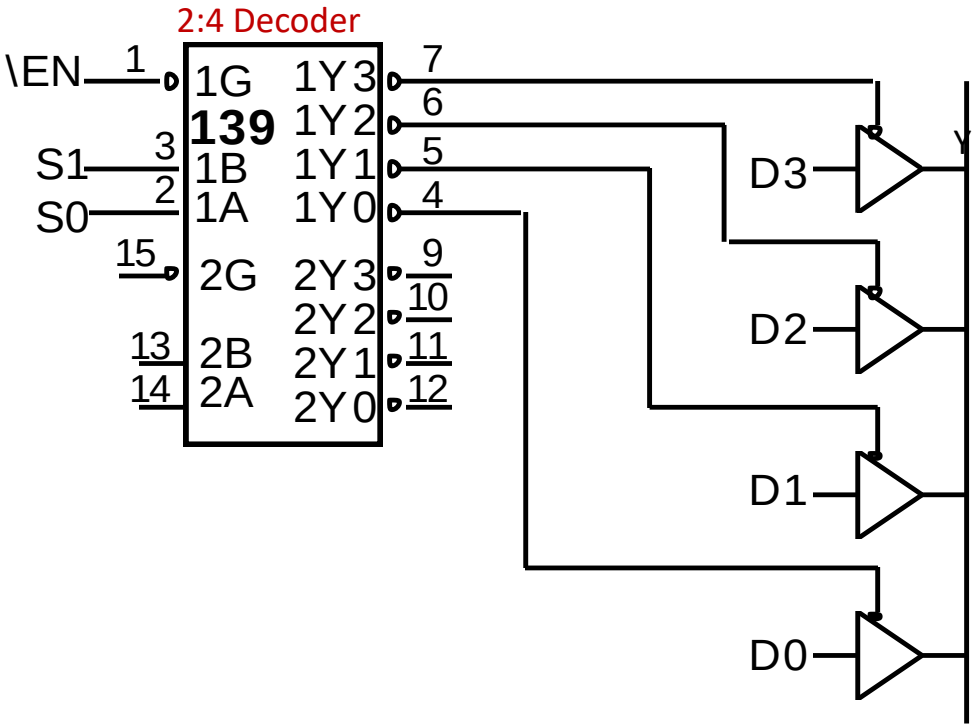

Aggregate 3 State Buffer Models

“BUS” Driver

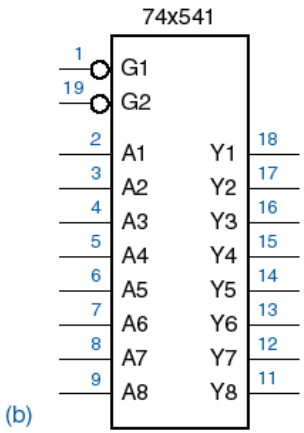

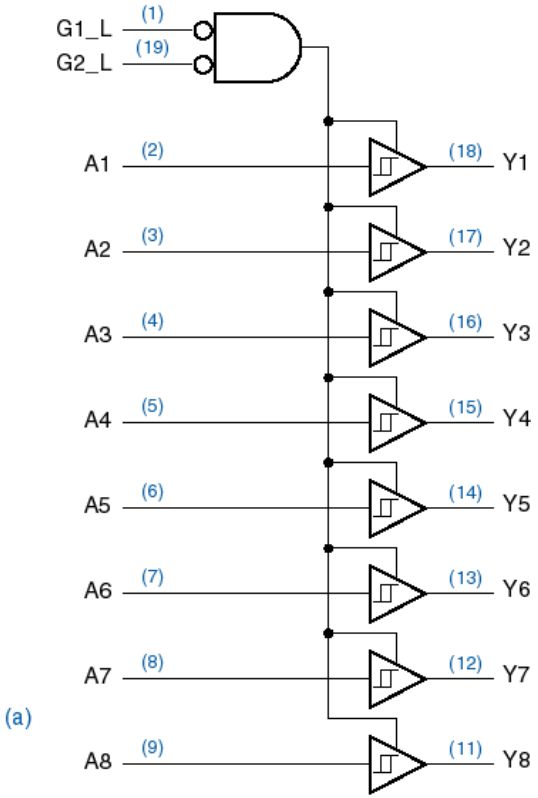

Transceiver

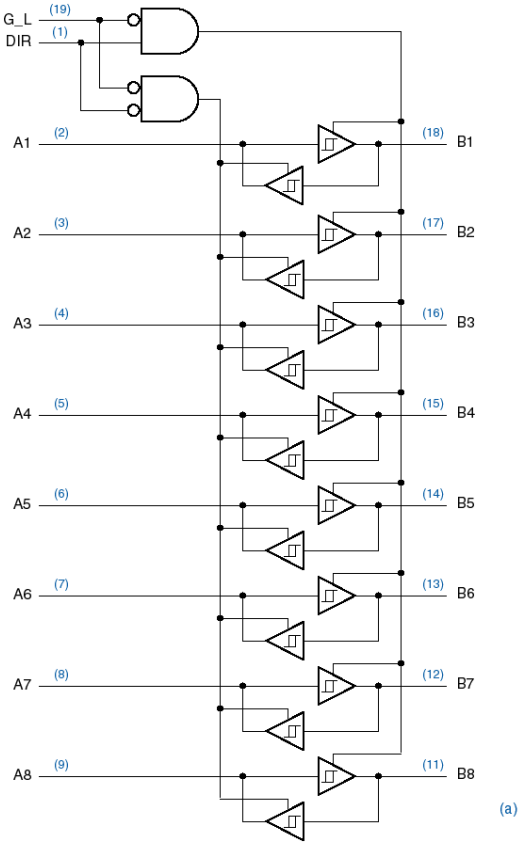

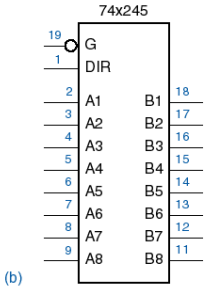

Word Multiplexing

- Main idea:
  - Decode the 3 State buffers enabling inputs
  - Share the output data bus

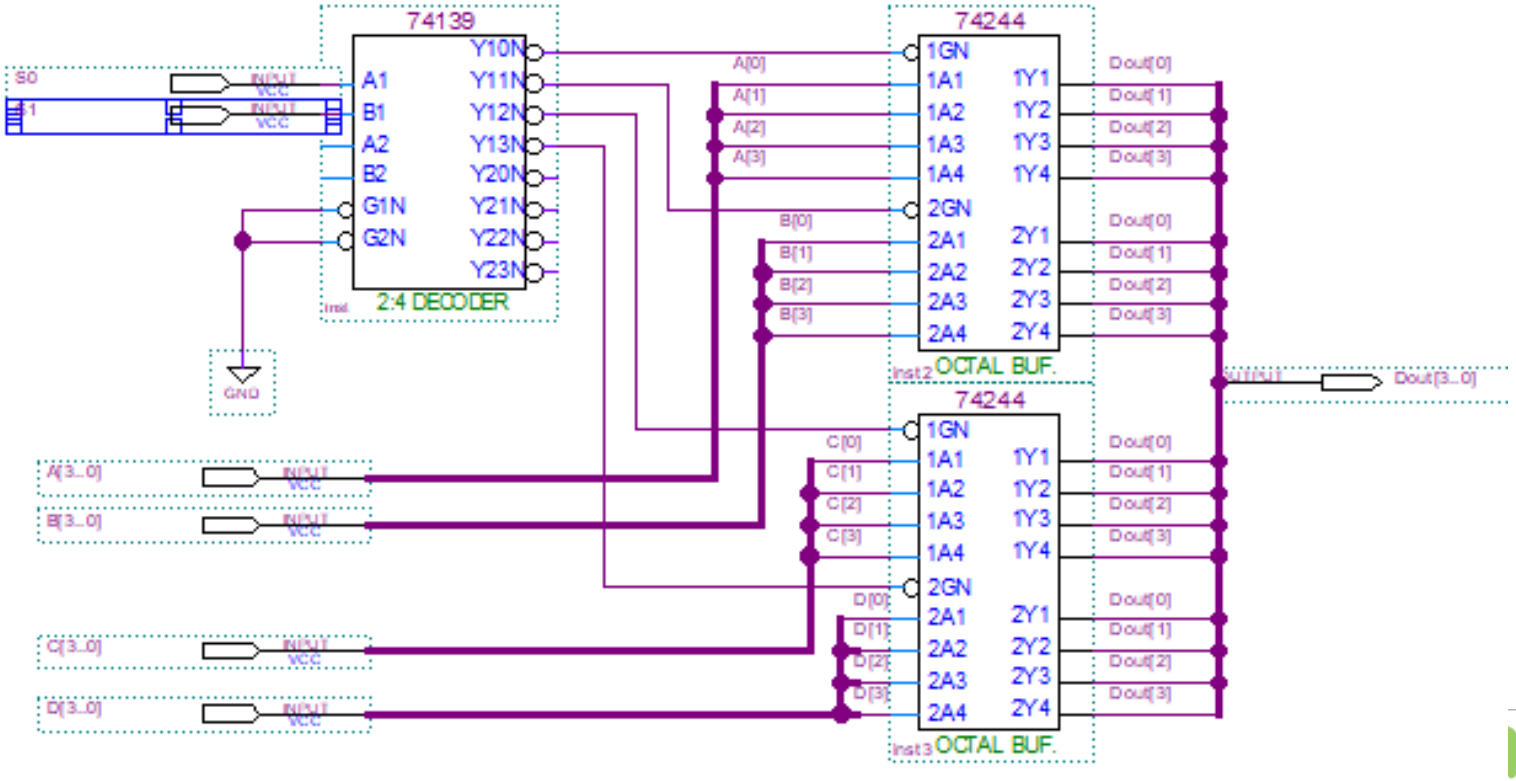

Exercise

- Explain the timing diagram of the previous circuit
  - SELECT = (S1,S0)

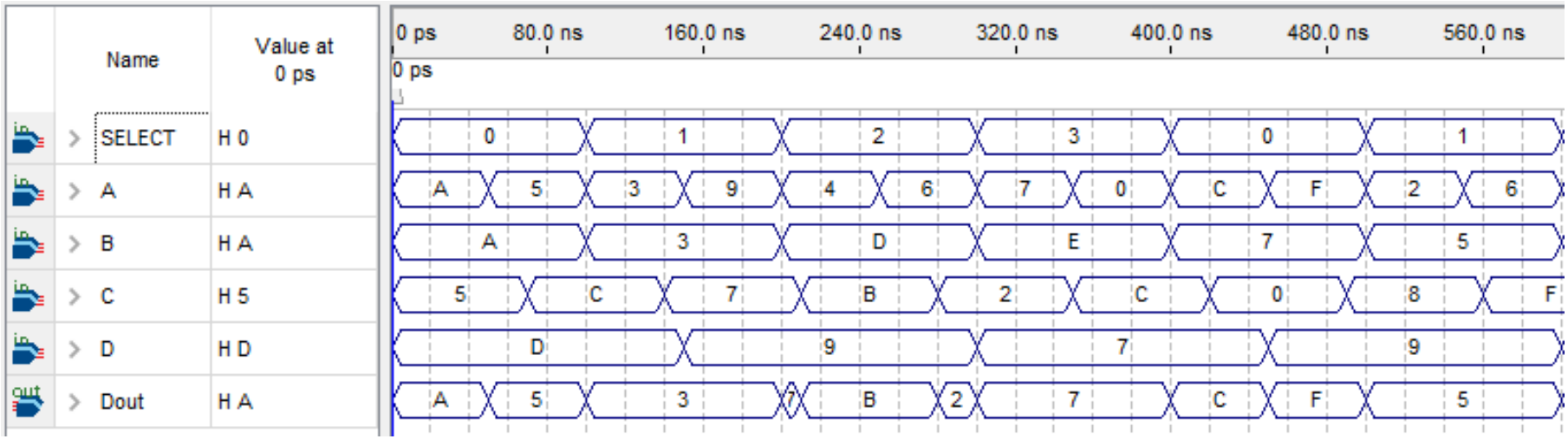

Exercise

- Implement the Boolean function *F* using a a MUX 4:1 and additional elementary logic

$$F(A,B,C,D) = A'C'D + B'C + AD'$$

- Several choices of input variables are possible to be assigned to the mux selection inputs. Select the ones that appear more times in the expression, e.g. A,C

Final Remarks

- Always recall
  - The block symbol
  - The types of inputs and outputs
    - Data
    - Control
  - The truth table
  - The output equations
- Design with encapsulated logic requires mastering all the functional details of each block